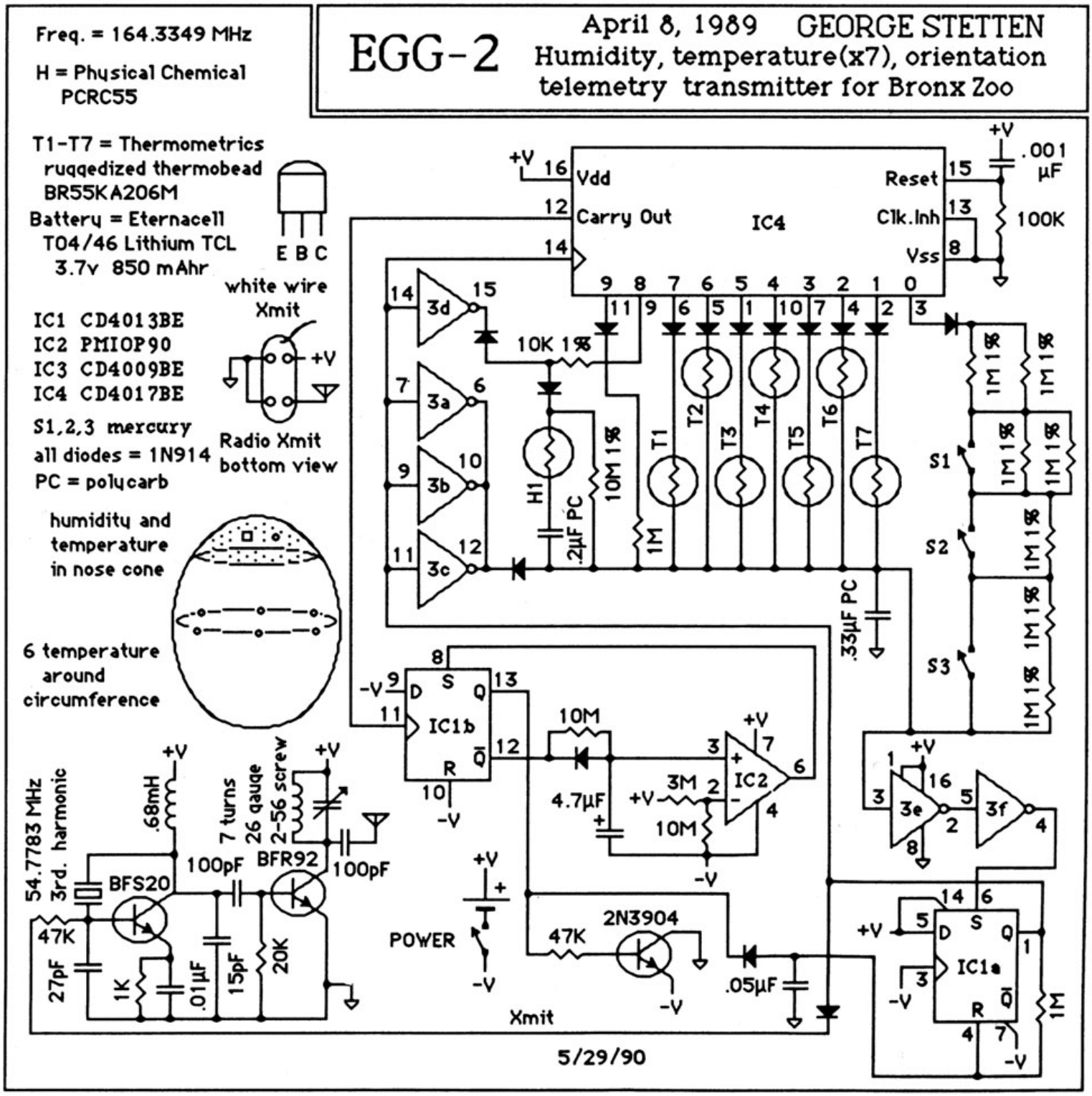
EGG-2
April 8, 1989 GEORGE STETTEN
Humidity, temperature(x7), orientation telemetry transmitter for Bronx Zoo
Freq. = 164.3349 MHz
H = Physical Chemical PCRC55
T1-T7 = Thermometrics ruggedized thermobead BR55KA206M
Battery = Eternacell T04/46 Lithium TCL 3.7v 850 mAhr
E B C
white wire Xmit
IC1 CD4013BE
IC2 PMIOP90
IC3 CD4009BE
IC4 CD4017BE
S1,2,3 mercury
all diodes = 1N914
PC = polycarb
Radio Xmit bottom view
humidity and temperature in nose cone
6 temperature around circumference
IC4
Vdd
Carry Out
Reset
Clk.Inh
Vss
.001 µF
100K
10K 1%
H1
.2µF PC
10M 1%
1M
T1
T2
T3
T4
T5
T6
T7
1M 1%
S1
S2
S3
.33µF PC
IC1b
10M
4.7µF
IC2
3M
10M
3e
3f
IC1a
54.7783 MHz 3rd. harmonic
.68mH
7 turns 26 gauge 2-56 screw
BFS20
BFR92
100pF
100pF
47K
27pF
1K
.01µF
15pF
20K
POWER
2N3904
47K
.05µF
Xmit
5/29/90